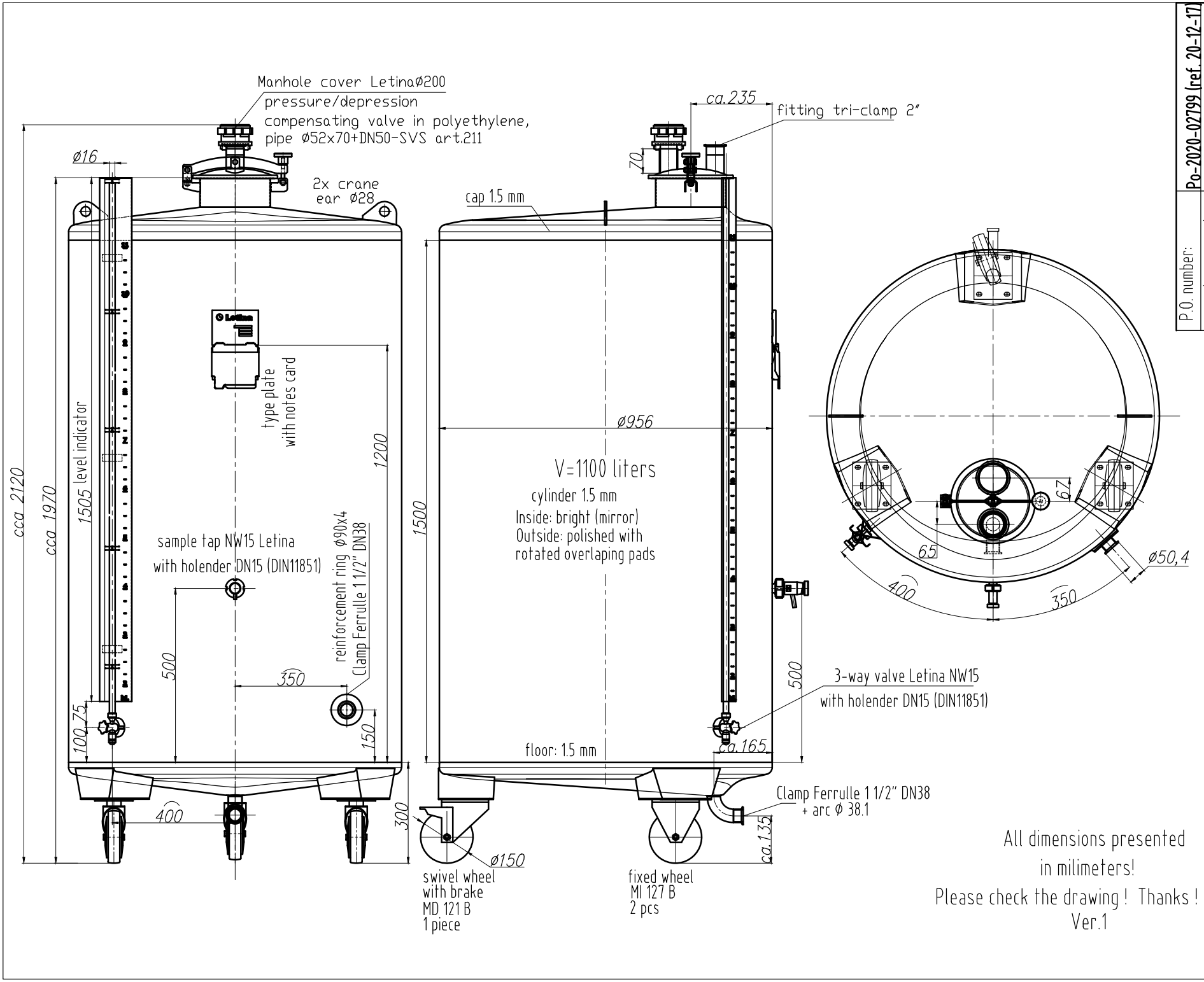

Manhole cover Letina Ø200
pressure/depression
compensating valve in polyethylene,
pipe Ø52x70+DN50-SVS art.211
Ø16
2x crane
ear Ø28
cap 1.5 mm
ca.235
fitting tri-clamp 2"
70
cca 2120
cca 1970
1505 level indicator
type plate
with notes card
1200
1500
Ø956
V=1100 liters
cylinder 1.5 mm
Inside: bright (mirror)
Outside: polished with
rotated overlaping pads
sample tap NW15 Letina
with holender DN15 (DIN11851)
reinforcement ring Ø90x4
Clamp Ferrulle 1 1/2" DN38
500
350
100
75
150
400
300
3-way valve Letina NW15
with holender DN15 (DIN11851)
floor: 1.5 mm
ca.165
Clamp Ferrulle 1 1/2" DN38
+ arc Ø 38.1
ca.135
Ø150
swivel wheel
with brake
MD 121 B
1 piece
fixed wheel
MI 127 B
2 pcs
67
65
Ø50,4
400
350
All dimensions presented
in milimeters!
Please check the drawing ! Thanks !
Ver.1
P.O. number: Po-2020-02799 (ref. 20-12-17)
Price:(EUR/piece)
Quantity: 10
Date of delivery: 21.12.2020.
Order confirmation:
Pridržavamo pravo izmjena.
Godina: 2020.
List: 1 Listova: 1
Konst: 21.12.
Datum
Ime
P.Mikulaj
Potpis
Dimenzije:
Artikl br.: 116095
Pozicija:
Pozicija:
Radni nalog: 171620_St.Patricks
Materijal: W.Nr.1.4301 IIId (AISI304)
Pozicija:
Stroj:
Mjerilo:
50 mm
Tank ZR1100SV10
L:\PKB\2020\2020_Radni Nalozi\171620_St.Patricks_ZR1100SV10\171620_St.Patricks_ZR1100SV10.dwg